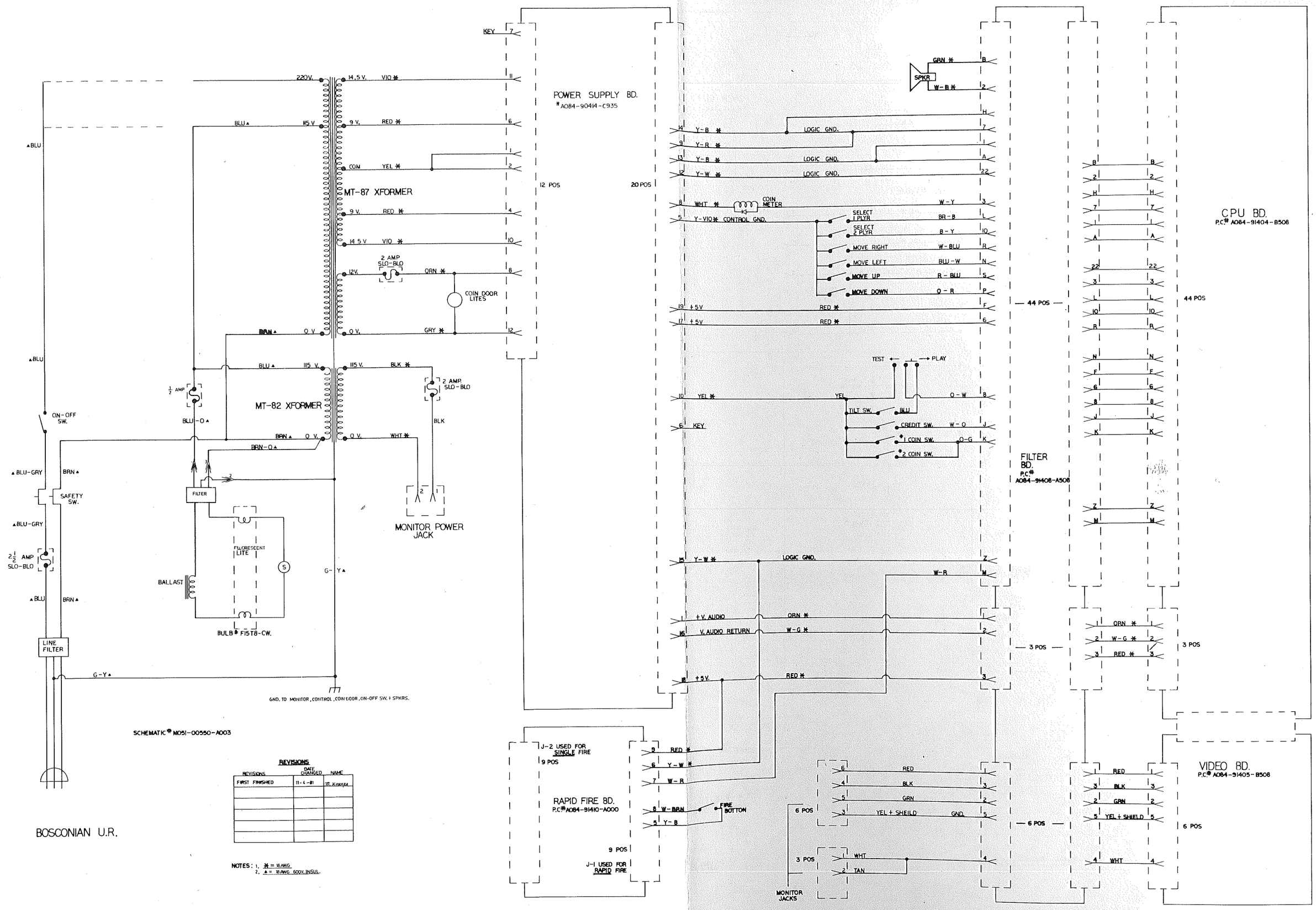

REVISIONS	DATE CHANGED	NAME
FIRST FINISHED	11-4-81	M. Kenepa

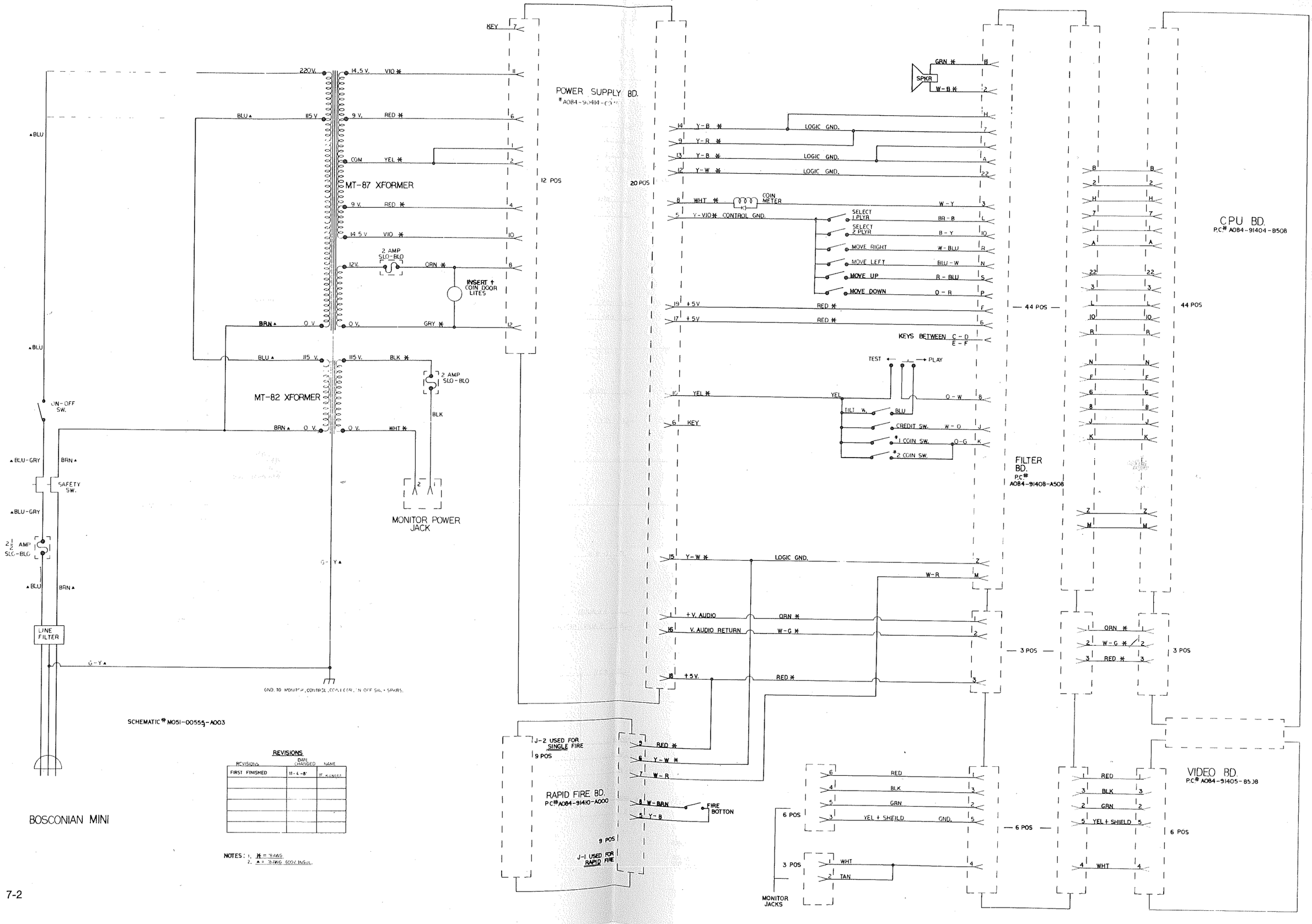
POWER SUPPLY BD.
MT-87 XFORMER
MT-82 XFORMER
MONITOR POWER JACK
ON-OFF SW.
SAFETY SW.
LINE FILTER
INSERT + COIN DOOR LITES
2 AMP SLO-BLO
12 POS
20 POS
SPKR
COIN METER
SELECT 1 PLYR
SELECT 2 PLYR
MOVE RIGHT
MOVE LEFT
MOVE UP
MOVE DOWN
CONTROL GND.
LOGIC GND.
KEYS BETWEEN C-D E-F
TEST
PLAY
TILT
CREDIT SW.
1 COIN SW.
2 COIN SW.
44 POS
FILTER BD.
P.C.# A084-91408-A508
CPU BD.
P.C.# A084-91404-B508
3 POS
RAPID FIRE BD.
P.C.# A084-91410-A000
J-2 USED FOR SINGLE FIRE
J-1 USED FOR RAPID FIRE
FIRE BOTTON
6 POS
MONITOR JACKS
VIDEO BD.
P.C.# A084-91405-B508
SCHEMATIC # M051-00555-A003
BOSCONIAN MINI
REVISIONS
FIRST FINISHED
NOTES: 1. ✱ = 18 AWG
2. ▲ = 18 AWG 600V. INSUL.

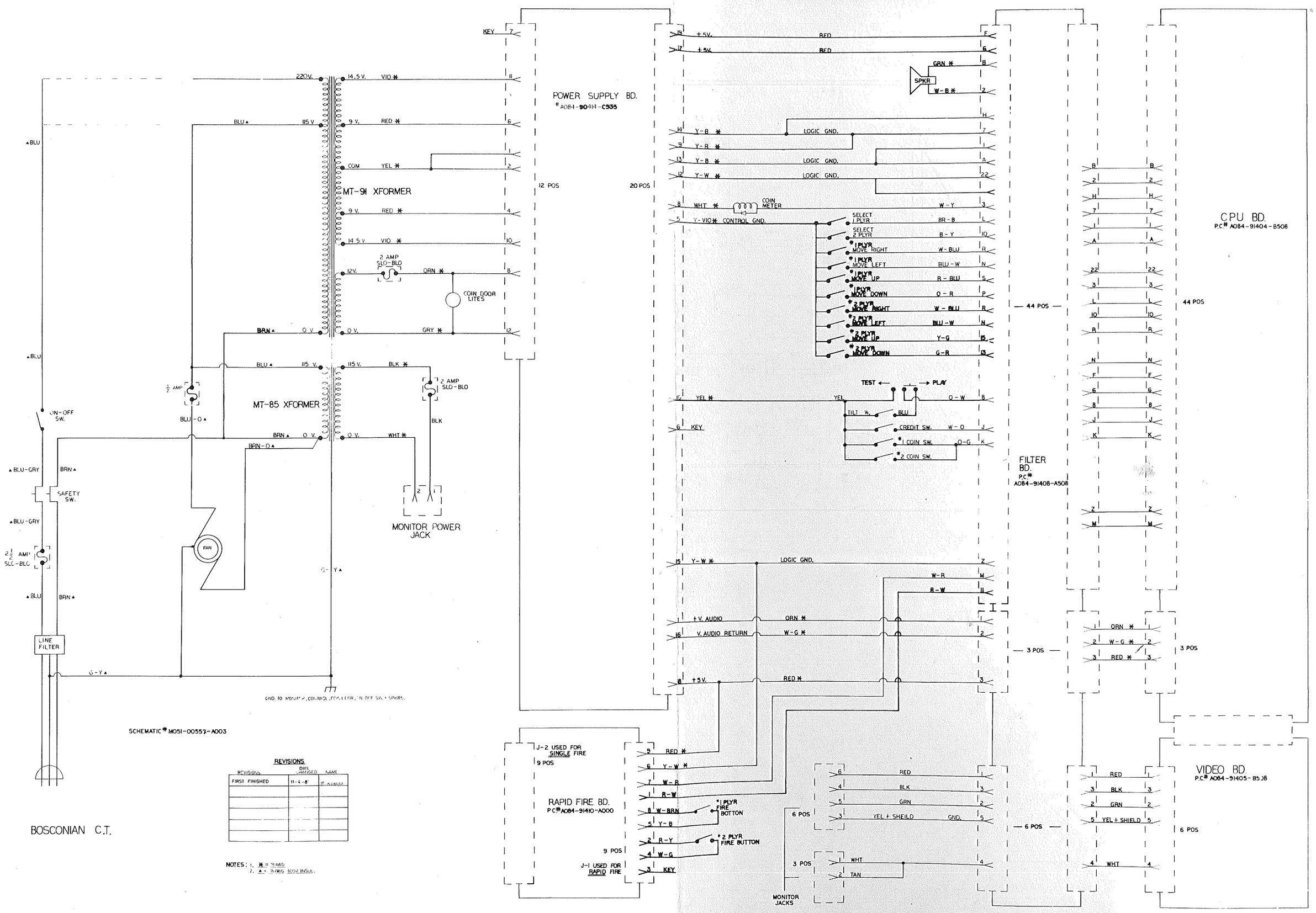
POWER SUPPLY BD.
A084-90414-C935
12 POS
20 POS
MT-91 XFORMER
MT-85 XFORMER
220V.
115 V
14.5 V.
9 V.
COM
12V.
0 V.
VIO *
RED *
YEL *
ORN *
GRY *
BLK *
WHT *
2 AMP SLO-BLO
COIN DOOR LITES
MONITOR POWER JACK
ON-OFF SW.
SAFETY SW.
FAN
LINE FILTER
GND. TO MONITOR, CONTROL, COIN DOOR, ON OFF SW. + SPKRS.
SCHEMATIC # M051-00557-A003
BOSCONIAN C.T.
REVISIONS
FIRST FINISHED
NOTES: 1. * = 18AWG
2. ▲ = 18AWG 600V INSUL.
+5V.
SPKR
W-B *
Y-B *
Y-R *
Y-W *
LOGIC GND.
COIN METER
CONTROL GND.
SELECT 1 PLYR
SELECT 2 PLYR
* 1 PLYR MOVE RIGHT
* 1 PLYR MOVE LEFT
* 1 PLYR MOVE UP
* 1 PLYR MOVE DOWN
* 2 PLYR MOVE RIGHT
* 2 PLYR MOVE LEFT
* 2 PLYR MOVE UP
* 2 PLYR MOVE DOWN
TEST
PLAY
TILT SW.
CREDIT SW.
* 1 COIN SW.
* 2 COIN SW.
KEY
FILTER BD.
P.C.# A084-91408-A508
44 POS
3 POS
6 POS
CPU BD.
P.C.# A084-91404-B508
+V. AUDIO
V. AUDIO RETURN
RAPID FIRE BD.
P.C.# A084-91410-A000
J-2 USED FOR SINGLE FIRE
J-1 USED FOR RAPID FIRE
* 1 PLYR FIRE BOTTON
* 2 PLYR FIRE BUTTON
MONITOR JACKS
VIDEO BD.
P.C.# A084-91405-B508
YEL + SHEILD
GND.
TAN

DESIGNATION	DESCRIPTION
C1	10000 MF 35V AX. ELEC.
C2	.01 MF 50V AX. CER.
C3	1MF 25V TANT.
C4	20000 MF 16V AX. ELEC.
C5	100 PF 50V AX. CER
C6	470 MF 16V AX. ELEC.
C7	4700 MF 25V " "
R1	470 OHM 1/4W 5% CRBN
R2	100 " " " "
R3	2.7K " " " "
R4	560 " " " "
R5	510 " " " "
R6	10 " " " "
VR1	100 OHM 1/4W CRBN. FLM.
D1, D2	A14F
D3	1N4004
D4, D5	MR750
D6-D9	A15F
D10	A14F
Q1	TIP31
Q2	2N3055
U1	LM317
U2	3532
L1	FERROXCUBE BEAD
HS1	HEAT SINK
F1	FUSE 2A
F2	" 8A
F3	" 6A
FC1A, FC1B, FC2A FC2B, FC3A, FC3B	FUSECLIP W/ STOP " "
J1	CONN. KK.156 (RA)(5-PIN)(6-PIN)
J2	" " (RA)(5-PIN)(13-PIN)
MHQ1	MOUNTING HARDWARE Q1 (1) SCREW 4-40X10 SLT RND (1) WSH.4 120-.250-018 (1) HEXNUT 4-40 (1) SHOULDER WSH. 974-302 THERMAL COMPOUD AS REQ. (1) TO-220 INSULATOR RT-3.5 MICA
MHQ2	MOUNTING HARDWARE Q2 (2) SCREW 4-40X10 SLT RND (2) WSH 4 120- 250-018 (2) HEXNUT 4-40 (2) SHOULDER WSH. 974-302 THERMAL COMPOUD AS REQ. (1) TO-3 RT-1.5 FILM
MHU1	MOUNTING HARDWARE U1 (1) SCREW 4-40X10 SLT RND (1) WSH 4 120-.250-018 (1) HEXNUT 4-40 (1) SHOULDER WSH. 974-302 THERMAL COMPOUD AS REQ (1) TO-220 INSULATOR RT-3.5 MICA
TW1-TW3	TIE WRAPS

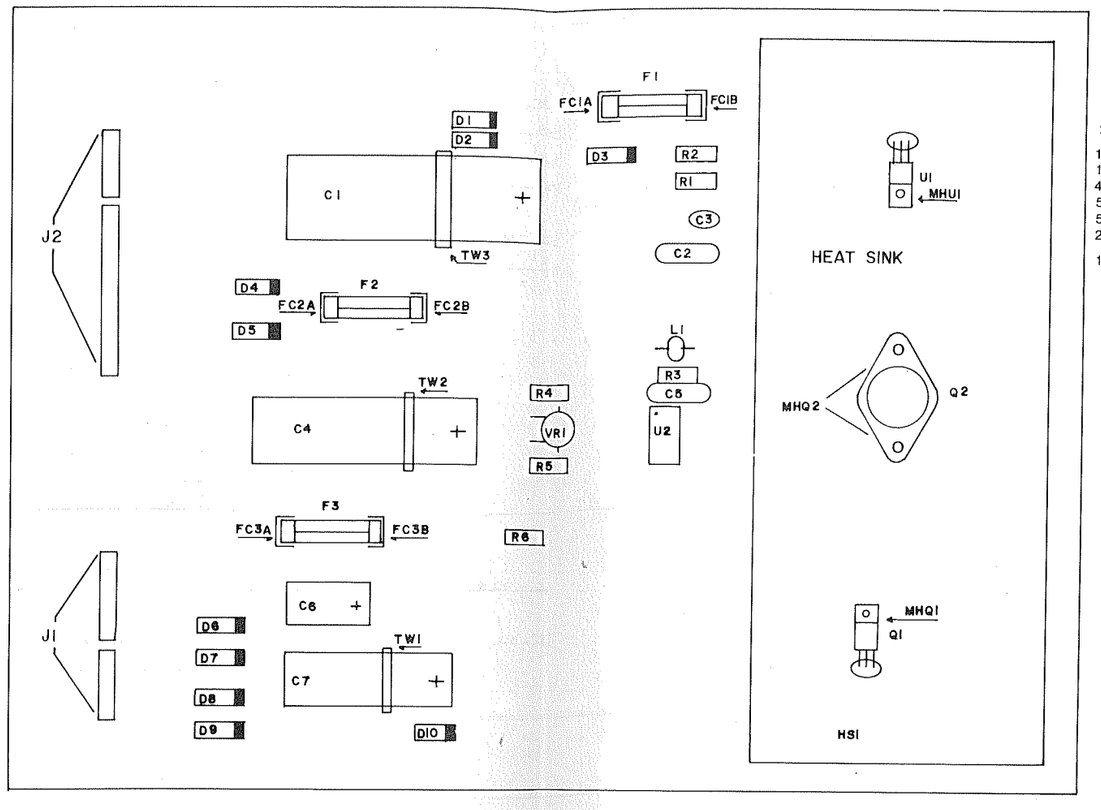

DESCRIPTION	QTY	DESIGNATION	PART NUMBER
100 PF 50v AX.CER.	1	C5	**0508-00800-2100**
.01MF " " "	1	C2	0171-097H2-JXXX
1MF 25v TANT.	1	C3	0935-00814-0100
470MF " AX.ELEC.	1	C6	0175-271EX-EXXX
4700MF " " "	1	C7	**0508-00800-2200**
10000MF 35v AX.ELEC.	1	C1	0175-322GX-EXBX
20000 16v MF " "	1	C4	0935-00814-0800
10 OHM 1/4w 5% CBN	1	R6	0062-051B3-1XXX
100 " " " "	1	R2	0062-110B3-1XXX
470 " " " "	1	R1	0062-156B3-1XXX
510 " " " "	1	R5	0062-159B3-1XXX
560 " " " "	1	R4	0062-162B3-1XXX
2.7K " " " "	1	R3	0062-199B3-1XXX
100 " " CBN FLM	1	VR1	0063-025AX-1DEX
1N4004	1	D3	0508-00801-0200
A14F	3	D1,D2,D10	0064-168XX-XXGX
A15F	4	D6-D9	0064-169XX-XXGX
MR750	2	D4,D5	0064-303XX-XXJX
TIP31	1	Q1	0065-485XX-XXXX
2N3055	1	Q2	0935-00800-0000
3532	1	U2.	0066-044BX-XXXX
LM317	1	U1	0935-00804-3600
FERROXCUBE BEAD	1	L1	0017-00009-0225
HEAT SINK	1	HS1	0068-045XX-ABDX
FUSE 2A	1	F1	0017-00003-0005
FUSE 6A	1	F3	0017-00003-0008
FUSE 8A	1	F2	0017-00003-0184
FUSECLIP	6	FC1A,FC1B,FC2A, FC2B,FC3A,FC3B	0017-00003-0214
KK 156 (RA) (5)	2	J1,J2	3000-16387-0500
KK 156 (RA) (6)	1	J1	3000-16387-0600
KK 156 (RA) (13)	1	J2	3000-16387-1300
SCREW 4-40x10	4	MHU1,MHQ1,MHQ2	0017-00101-0727
WSH 4 120-.250-018	4	" " "	0017-00104-0071
HEXNUT 4-40	4	" " "	0017-00103-0002
SHOULDER WSH	4	" " "	0017-00042-0109
THERMAL COMPOUND	AS REQ.	" " "	0017-00009-0204
TO-220,INSULATOR	2	MHU1,MHQ1	0017-00003-0205
TO-3 INSULATOR	1	MHQ2	0017-00042-0108
TIE WRAPS	3	TW1-TW3	0017-00042-0105
PCB	1	———	**A080-90414-C935**

THIS DWG IS CONFIDENTIAL & PROPERTY OF MIDWAY MFG CO

DIM. TOLERANCES UNLESS OTHERWISE SPEC. CONCENTRICITY T.I.R. .002 FRACTIONAL ± 1/64 DECIMAL ± .005 HOLE DIA +.002 −.000 ANGLE ± 1/2° DO NOT SCALE DWG	FIRST USED ON: RALLY-X DRN. MMM DATE 2/9/82 SCALE MECH CHK. Y.S. MAT'L FINISH	MIDWAY MFG. CO. FRANKLIN PK., IL 60131 A BALLY CO	REVISIONS
		ASSEMBLY DRWNG PWR. SUPP. A084-90414-C935	PART NO. M051-00935-C028

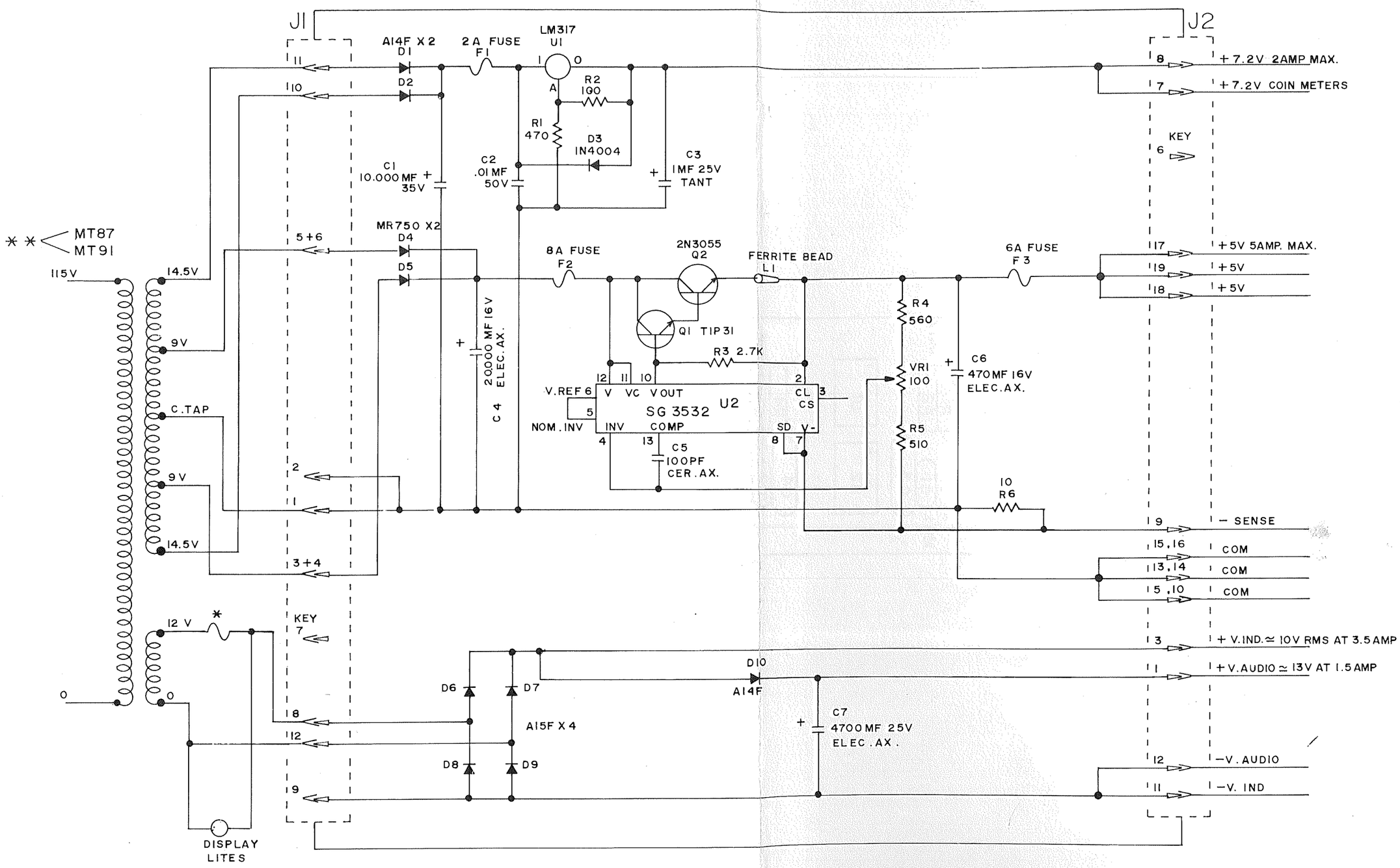

NOTES:

* 2AMP FUSE W/O DISPLAY LITES

** MT87 FOR UR.
MT91 FOR C.T.

DO NOT SCALE DWG	HEAT TREAT	SCALE FULL	USED ON RALLY-X	REVISIONS
DIM. TOLERANCES UNLESS SPECIFIED — DRN. M.M.	MAT'L	SCHEMATIC POWER SUPPLY A084-90414-C935	NO. REQ'D 1 PER	MIDWAY MFG. CO. FRANKLIN PK. ILL.
CONCENTRICITY T.I.R. .003 FRACTIONAL ±1/64 DECIMAL .005 HOLE DIA. +.002 .000 — CKD. — DATE 2-10-82	FINISH			ART NO. M051-00935-C025

DESIGNATION LIST

DESIGNATION	DESCRIPTION
C1, C2	.1MF 100V MYLAR
C3-C7	.01MF 25V AX CER
R1-R4	1MEG OHM 1/4w 5% CRBN RES
R5	1K " " " " "
R6	68 " " " " "
R7	1K " " " " "
R8	68 " " " " "
U1	LM556
U2	7400
J1, J2	KK.156 VERT 2(6-PIN) 2(2-PIN)
MH1-MH4	SNAP BUSHING 1/4"

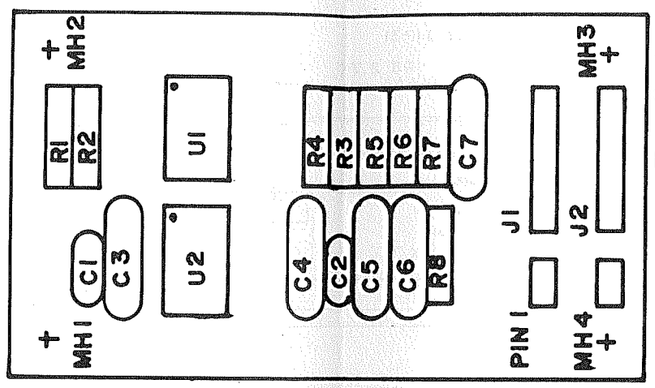

CROSS REFERENCE LIST

DESCRIPTION	QUANTITY	DESIGNATION	PART #
.01MF 25VAXCER	5	C3-C7	0508-00800-0800
.1MF 100V 10% MYLAR	2	C1, C2	0508-00800-2300
68 OHM 1/4w 5% CRBN RES.	2	R6, R8	0062-098B3-1XXX
1K " " " " "	2	R5, R7	0062-179B3-1XXX
1MEG " " " " "	4	R1-R4	0062-323B3-1XXX
LM556	1	U1	0508-00803-5500
7400	1	U2	0508-00803-5600
KK.156 CON. (2-PIN)	2	J1, J2	3000-16335-0200
(6-PIN)	2	J1, J2	3000-16335-0600
MOUNTING HARDWARD SNAP BUSHING 1/4"	4	MH1-MH4	0017-00042-0014
RAPID FIRE P.C	1	A080-91410-A000	A080-91410-A000

PROJECT ENG: JERRY SZERSZEN

THIS DWG IS CONFIDENTIAL & PROPERTY OF MIDWAY MFG. CO.

DIM. TOLERANCES UNLESS OTHERWISE SPEC	GALAGA		MIDWAY MFG. CO. FRANKLIN PK., IL. 60131 A BALLY CO.
CONCENTRICITY T I R .002	DRAWN MM	DATE 09-30-81	SCALE FULL
FRACTIONAL ± 1/64	MECH CHK	MATL	RAPID FIRE P.C. ASSEMBLY DRAWING A082-91410-A000
DECIMAL ± .005	ELEC CHK	FINISH	REVISIONS
HOLE DIA + .002 -- .000			PART NO M05-1-0001:4-A001
ANGLE ± 1/2°			
DO NOT SCALE DWG			

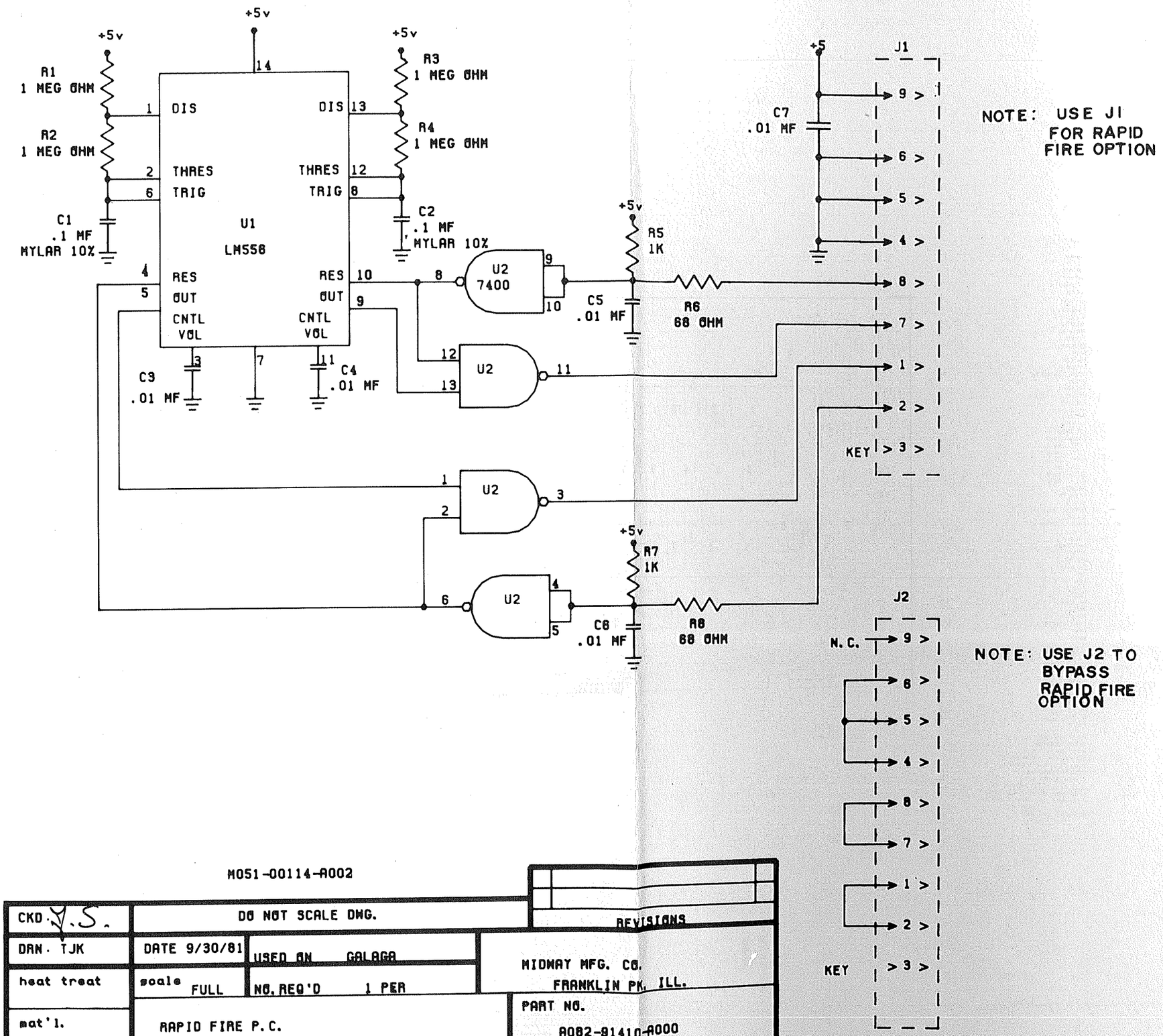

M051-00114-A002

CKD. Y.S.	DO NOT SCALE DWG.	REVISIONS
DRN. TJK	DATE 9/30/81 USED ON GALAGA	MIDWAY MFG. CO. FRANKLIN PK. ILL.
heat treat	scale FULL NO. REQ'D 1 PER	
mat'l.	RAPID FIRE P.C.	PART NO. A082-91410-A000
finish		

DESIGNATION LIST

DESIGNATION	DESCRIPTION
C1	470 MF ELEC.
C2—C17	.01 MF CER.
C18	.1MF "
C19	.01 MF "
C20	22 MF ELEC.
C21	220 MF "
C22	100 MF "
C23,C24	.15 MF TANT.
C25	10 MF ELEC.
C26—C29	.01 MF POLY.
C30,C31	.001 MF "
C32—C42	NOT USED
C43	.0022 MF CER.
C44	10 MF ELEC.
C45	100 PF CER.
C46—C63	.1 MF "
CX1	NOT USED
CX2	100 PF CER.
R1,R2	330 OHM 1/4w 5% CRBN.
R3,R4	NOT USED
R5	100 OHM 1/4w 5% CRBN.
R6	1K " " " "
R7,R8	10K " " " "
R9	NOT USED
R10	10K OHM 1/4w 5% CRBN.
R11	22K " " " "
R12	47K " " " "
R13	100K " " " "
R14	NOT USED
R15	470 OHM 1/4w 5% CRBN.
R16	1K " " " "
R17	2.2K " " " "
R18	4.7K " " " "
R19	10K " " " "
R20	3.3K " " " "
R21	33K " " " "
R22	220K " " " "
R23	22K " " " "
R24	100K " " " "
R25	4.7K " " " "
R26	10K " " " "
R27	22K " " " "
R28	47K " " " "
R29	4.7K " " " "
R30	10K " " " "
R31	22K " " " "
R32,R33	47K " " " "
R34	10K " " " "
R35	150K " " " "
R36	33K " " " "
R37	10K " " " "
R38	3.3K " " " "
R39	2.2K " " " "
R40	470K " " " "
R41	22K " " " "
R42	150K " " " "
R43	4.7K " " " "
R44	10K " " " "
R45	22K " " " "
R46	47K " " " "
R47,R48	470 " " " "
R49,R50	NOT USED
R51	10K OHM 1/4w 5% CRBN.
R52—R54	1K " " " "
R55	10K " " " "
R56—R62	1K " " " "
R63,R64	NOT USED
R65	4.7K OHM 1/4w 5% CRBN.
RX1	1K " " " "
RM1—RM3	1K OHM 5 PIN SIP.
RM4	1K " 9 PIN "
RM5	1K " 9 PIN "
RM6,RM7	1K " 9 PIN "
RM8	NOT USED
RM9	1K OHM 8 PIN SIP.
RM10—RM13	2.2K " 8 PIN "
RM14,RM15	NOT USED
RM16	220 OHM 9 PIN SIP.
RM17—RM20	2.2K " 9 PIN "
RM21,RM22	4.7K " " "
VR1	1K POT

DESIGNATION	DESCRIPTION
D1	1N914B
Q1	2N3391A
Q2	2N4403
Q3,Q4	NOT USED
Q5	TIP 110
IC 1A	74LS107
" 1B	74LS283
" 1C	74LS174
" 1D	PROM 85-1
" 1E,1F,1H,1J,1K,1L,1M,1N	74LS367
" 1P	74LS139
" 2A,2B	7489
" 2C	74LS157
" 2D	74LS158
" 2E,2H,2J	08XX CUSTOM IC
" 2L	05XX " "
" 2M	74LS245
" 2N	STATIC RAM 2K X 8
" 2P	74LS138
" 3A	4066 CMOS
" 3B	74LS273
" 3C	74LS269
" 3D	NOT USED
" 3E	EPROM 85-G
" 3H	" 85-F
" 3J	" 85-E
" 3K	" 85-D
" 3L	" 85-C
" 3M	" 85-B
" 3N	" 85-A
" 3P	74LS32
" 4B	74LS139
" 4C	74LS82
" 4D	07XX CUSTOM IC
" 4E	Z-80A
" 4H	51XX CUSTOM IC
" 4J	Z-80A
" 4K	74LS151
" 4L	NOT USED
" 4M	Z-80A
" 4P	74S139
" 5A	74LS366
" 5B	74107
" 5C	PROM 85-2
" 5K	74LS101
" 5P	LM324
" 6A	74LS393
" 6B	74128
" 6C	74LS139
" 6L	50XX CUSTOM IC
" 6M	54XX " "
" 7C	MB3730
ICS 1D	16 PIN SOCKET
" 2E,2H,2J,2L	28 PIN "
" 2N,2E,2H,3J,3K,3L,3M,3N	24 PIN "
" 4D	28 PIN "
" 4E	40 PIN "
" 4H	42 PIN "
" 4J,4M	40 PIN "
" 5A	16 PIN "
" 5B	14 PIN "
" 6C	16 PIN "
" 6L,6M	28 PIN "
XTAL 1	18.432 MHZ CRYSTAL
SW 1	AKC-8 PB SWITCH
DIP SW 6J,6K	8 POS. DIP SWITCH
J1	CONN. R.A.HEADER 50 PIN
J2	CONN. P.C.B.HEADER 3 PIN
MH(C7C	MOUNTING HARDWARE — (2) 4-40 HEX NUT — (2) 4-40 X 9 BLT PAN M.S. — (2) WSH 4 .125-.250-.032 FLT. ST — (2) WSH 4 .120-.250-.018 EXT. ST
P.C.B.	BOSCONIAN CPU BD.

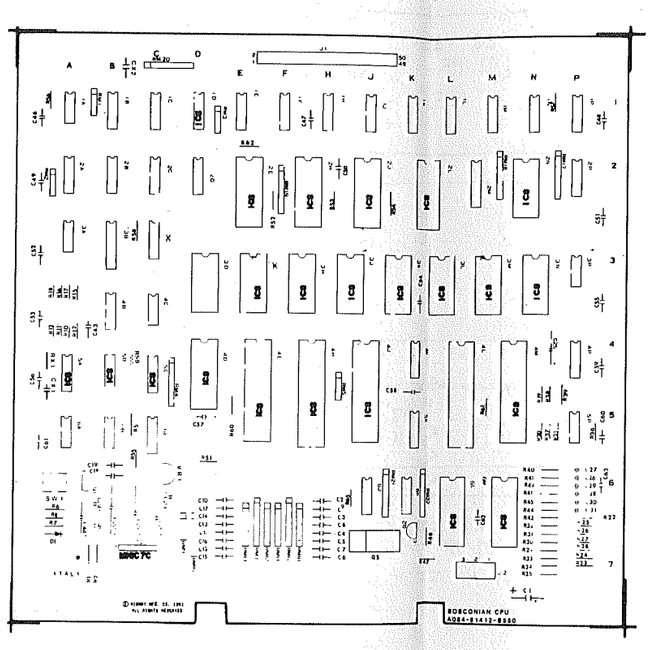

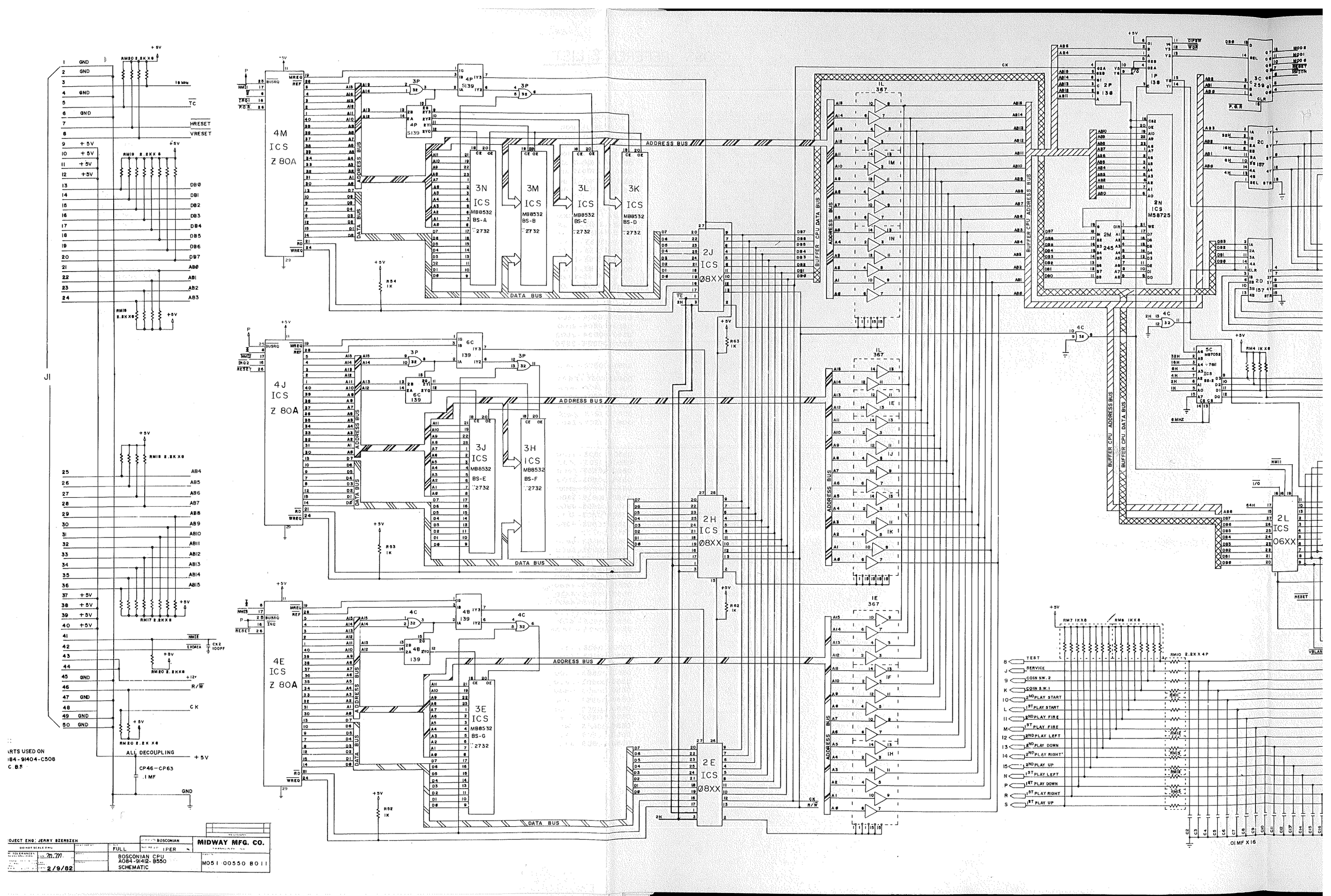
4M ICS Z 80A
4J ICS Z 80A
4E ICS Z 80A
3N ICS MB8532 BS-A 2732
3M ICS MB8532 BS-B 2732
3L ICS MB8532 BS-C 2732
3K ICS MB8532 BS-D 2732
3J ICS MB8532 BS-E 2732
3H ICS MB8532 BS-F 2732
3E ICS MB8532 BS-G 2732
2J ICS Ø8XX
2H ICS Ø8XX
2E ICS Ø8XX
2L ICS Ø6XX
2N ICS M58725
ADDRESS BUS
DATA BUS
BUFFER CPU ADDRESS BUS
BUFFER CPU DATA BUS
ALL DECOUPLING
CP46-CP63
.1 MF
GND
+5V
+12V
TEST
SERVICE
COIN SW. 2
COIN SW. 1
2ND PLAY START
1ST PLAY START
2ND PLAY FIRE
1ST PLAY FIRE
2ND PLAY LEFT
2ND PLAY DOWN
2ND PLAY RIGHT
2ND PLAY UP
1ST PLAY LEFT
1ST PLAY DOWN
1ST PLAY RIGHT
1ST PLAY UP
.01 MF X 16
PROJECT ENG: JERRY BZERSZEN
BOSCONIAN
MIDWAY MFG. CO.
FULL
BOSCONIAN CPU
A084-91412-B550
SCHEMATIC
M051 00550 B011
2/9/82

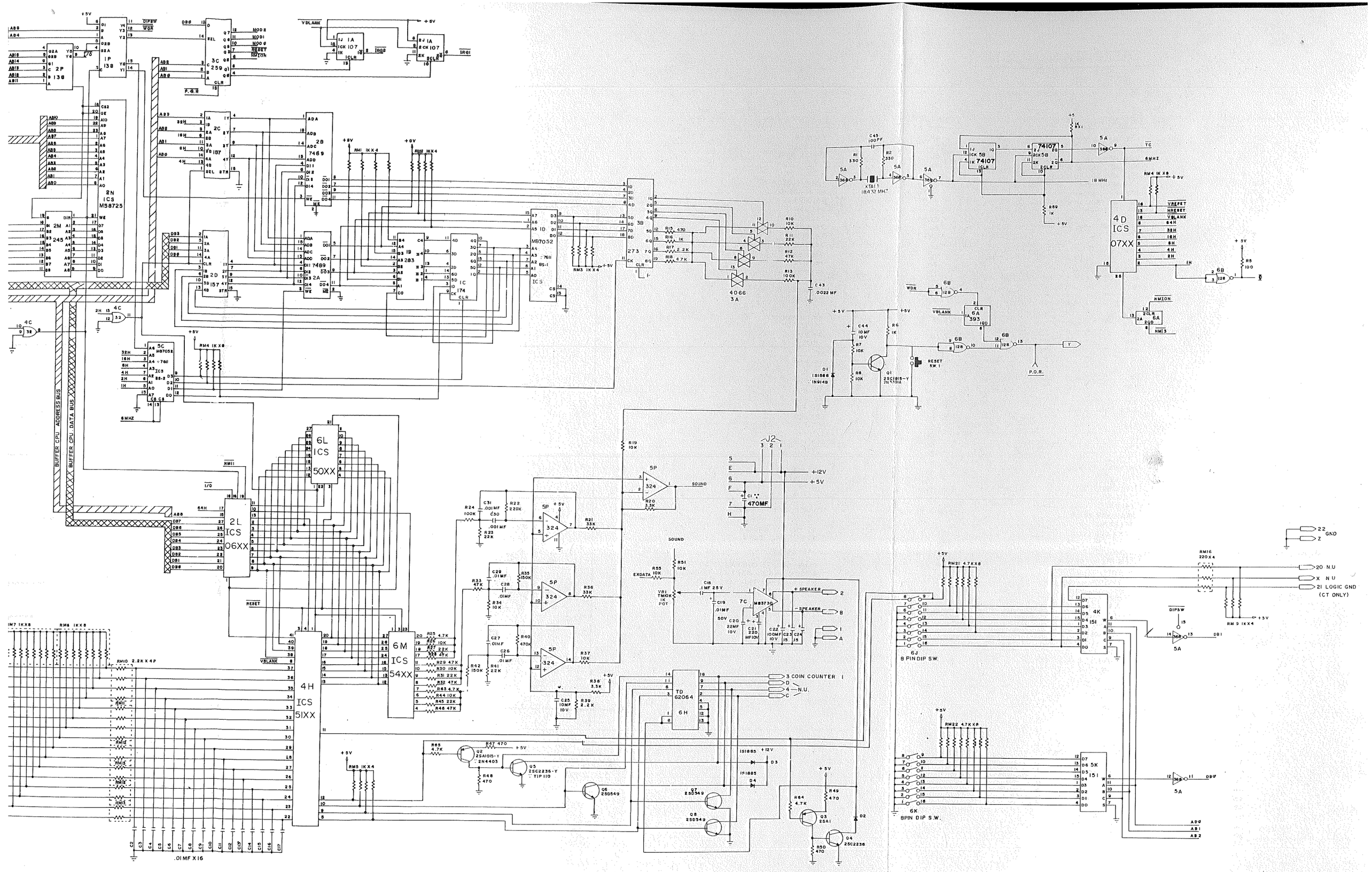
BUFFER CPU ADDRESS BUS
BUFFER CPU DATA BUS
2N ICS M58725
6L ICS 50XX
2L ICS 06XX
6M ICS 54XX
4H ICS 51XX
4D ICS 07XX
SOUND
+12V
+5V
470MF
SPEAKER
COIN COUNTER
N.U.
LOGIC GND (CT ONLY)
6J 8 PIN DIP SW.
6K 8PIN DIP SW.
P.O.R.
RESET SW 1
XTAL1 18.432 MHZ
.01MF X 16

DESIGNATION LIST

DESIGNATION	DESCRIPTION
C 1	470 MF ELEC.
C 4	.022 MF POLY.
C 5, C6	.0047 MF "
C 7	.001 MF 100V 10% POLY
C8, C9	.001 MF 50V 10% CER.
C10 — C45	.1 MF CER.
C46	220 PF MICA
C47	.001 MF 50V 10% CER.
C48	100 PF. CER.
R 1	220 OHM 1/4w 5% CRBN.
R 2	470 " " " "
R 3	220 " " " "
R 4	470 " " " "
R 5	1 K " " " "
R 6	220 " " " "
R 7	470 " " " "
R 8	1 K " " " "
R 11	10 K " " " "
R 12	22 K " " " "
R 13	47 K " " " "
R 14, R15	100 K " " " "
R16	22K " " " "
R17	33K " " " "
R18	47K " " " "
R19	1K " " " "
R20	100 " " " "
R21 — R31	1 K " " " "
R32	330 " " " "
RM1 — RM4	2.2 K OHM 9 PIN SIP.
RM5, RM6	1K " " " "
RM7	470 " " " "
RM8 — RM10	1K " " " "
RM11	1K " 5 PIN "
Q1, Q2	2N3391A
IC 1B	74LS259
" 1C	74LS138
" 1D	74LS377
" 1E, 1H	PHAN. RAM 2K X 8
" 1J, 1K	74LS374
" 1M	06XX CUSTOM IC
" 1N	50XX " "
" 1R	07XX " "
** " 2B	RAM KIT B OPTION 1
" 2C	74LS163
" 2D	PROM BS-3
" 2E	7489
" 2F, 2H	74LS245
" 2J, 2K, 2L, 2M	74LS283
" 2N	74LS244
" 2P	74LS257
" 2R	PROM BS-4
** " 3A, 3B	RAM KIT B OPTION 2
" 3C, 3D, 3E, 3F	74LS163
" 3H	74LS283
" 3J	74LS20
" 3K	74LS283
" 3L, 3M	74LS86
" 3N	74LS20
" 3P	74LS86
" 3R	74LS138
" 4A	74LS174
" 4B	74LS365
" 4C	74LS273
* " 4D, 4E, 4F, 4H	RAM KIT A OPTION 2
* " 4J	" " " " 1
" 4K	03XX CUSTOM IC
" 4L	74LS377
" 4M	PROM BS-5
" 4N	03XX CUSTOM IC
" 4P	74LS368
" 5A	PHAN. PAL BS-8
" 5B	05XX CUSTOM IC
" 5D	EPROM BS-P
" 5E	" BS-N

DESIGNATION	DESCRIPTION
IC 5F, 5H	74LS174
" 5K	NOT USED
" 5L	EPROM BS-L
" 5M	" BS-K
" 5N	" BS-J
" 5R	52XX CUSTOM IC
" 6B	PROM BS-6
" 6C, 6D	74LS194
" 6E	74LS86
" 6F, 6H	74LS157
" 6J	74LS86
" 6K	74LS175
" 6L	74LS08
" 7C	74LS157
" 7D	74LS174
" 7E	74LS00
" 7F	74LS08
" 7H	PROM BS-7
" 7J	74LS175
ICS 1E	24 PIN SOCKET
" 1H	" " "
" 1M	28 PIN "
" 1N	" " "
" 1R	" " "
" 2D	16 PIN "
" 2R	" " "
" 4K	18 PIN "
" 4M	16 PIN "
" 4N	18 PIN "
" 5A	20 PIN "
" 5B	24 PIN "
" 5D	" " "
" 5E	" " "
" 5L	" " "
" 5M	" " "
" 5N	" " "
" 5R	42 PIN "
" 6B	16 PIN "
" 7H	" " "
PCMH1 - PCMH4	DUALLOCKING SPACERS
J1	50 PIN RT. ANGLE
J2	6 PIN MNL CONN.
CABLE ASSY	AS BELOW
P1, P2	PLUG - SOCKET CONNECTOR 50-PIN
CABLE	RIBBON CABLE - .33FT 50-CONNECTOR 28 GA. STRND. RND. CONDUCTOR
A080-91413-B550	BOSCONIAN P.C.B.

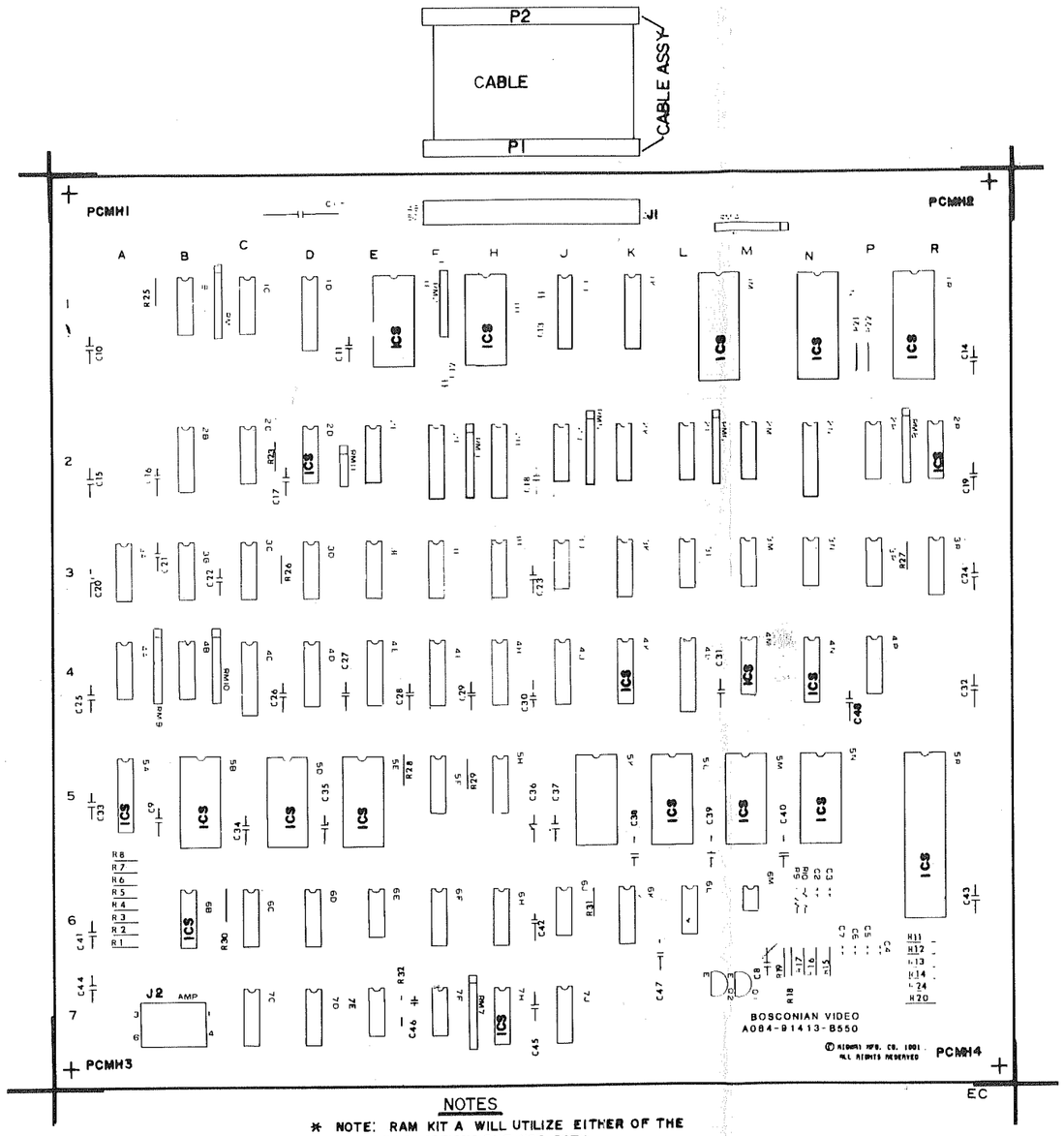

NOTES

* NOTE: RAM KIT A WILL UTILIZE EITHER OF THE FOLLOWING OPTIONS BUT NOT BOTH;
OPTION 1 — (1) 2148 LOC. 4J
OR
OPTION 2 — (4) 2147 LOC. 4D, 4E, 4F, 4H

** NOTE: RAM KIT B WILL UTILIZE EITHER OF THE FOLLOWING OPTIONS BUT NOT BOTH;
OPTION 1 — (1) 2148 LOC. 2B
OR
OPTION 2 — (2) HM2511 LOC. 3A, 3B

0

CROSS REFERENCE LIST

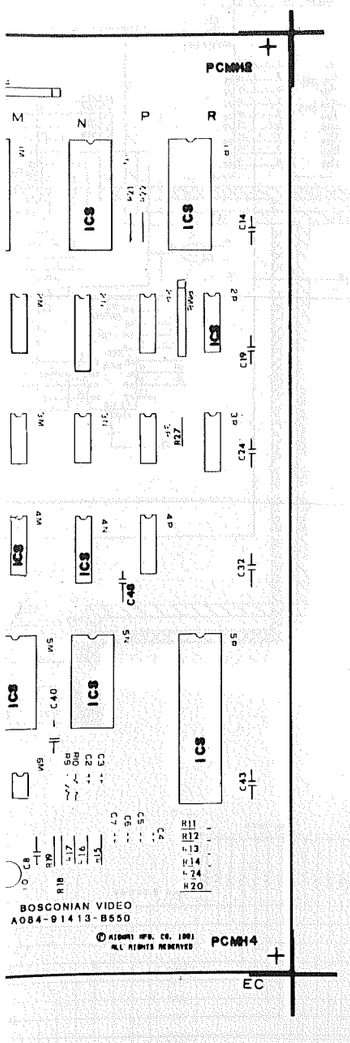

DESCRIPTION	QUAN.	DESIGNATION	PART NO.
100 PF CER.	1	C48	0550-00800-0900
220 PF MICA.	1	C46	0550-00800-2000
.001 MF 100V 10% POLY.	1	C7	0550-00800-2100
.001 MF 50V 10% CER.	3	C8,C9,C47	0550-00800-2400
.0047 MF POLY.	2	C5,C6	0550-00800-2200
.022 MF "	1	C4	0550-00800-2300
.1 MF CER.	36	C10—C45	0550-00800-2500
470 MF ELEC.	1	C1	0508-00800-1500
100 OHM 1/4w 5% CRBN	1	R20	0062-11083-1XXX
220 " " " "	3	R1,R3,R6	0062-13383-1XXX
330 " " " "	1	R32	0062-14483-1XXX
470 " " " "	3	R2,R4,R7	0062-15683-1XXX
1K " " " "	14	R5,R8,R19,R21—R31	0062-17983-1XXX
10K " " " "	1	R11	0062-22783-1XXX
22K " " " "	2	R12,R16	0062-24383-1XXX
33K " " " "	1	R17	0062-25183-1XXX
47K " " " "	2	R13,R18	0062-25983-1XXX
100K " " " "	2	R14,R15	0062-27583-1XXX
470 OHM 9 PIN SIP.	1	RM7	0550-00804-2400
1K " " " "	5	RM5,RM6,RM8—RM10	0550-00804-2100
1K " 5PIN "	1	RM11	0550-00804-2000
2.2K " 9PIN "	4	RM1—RM4	0550-00804-2200
2N3391A	2	Q1,Q2	0550-00802-0400
03XX CUSTOM IC	2	IC 4K,4N	0066-010CX-XAPX
05XX " "	1	" 5B	0066-004CX-XAPX
06XX " "	1	" 1M	0066-005CX-XAPX
07XX " "	1	" 1R	0066-006CX-XAPX
50XX " "	1	" 1N	0066-012CX-XAPX
52XX " "	1	" 5R	0066-013CX-XAPX
74LS00	1	IC 7E	0550-00803-3400
74LS08	2	" 6L,7F	0550-00803-3500
74LS20	2	" 3J,3N	0550-00803-3600
74LS86	5	" 3L,3M,3P,6E,6J	0550-00803-3700
7489	1	" 2E	0550-00803-3300
74LS138	2	" 1C,3R	0550-00803-3800
74LS157	3	" 6F,6H,7C	0550-00803-3900
74LS163	5	" 2C,3C,3D,3E,3F	0550-00803-7100
74LS174	4	" 4A,5F,5H,7D	0550-00803-4000
74LS175	2	" 6K,7J	0550-00803-7000
74LS194	2	" 6C,6D	0550-00803-6900
74LS244	1	" 2N	0550-00803-6800
74LS245	2	" 2F,2H	0550-00803-4100
74LS257	1	" 2P	0550-00803-4200
74LS259	1	" 1B	0550-00803-4300
74LS273	1	" 4C	0550-00803-4400
74LS283	6	" 2J,2K,2L,2M,3H,3K	0550-00803-4500
74LS365	1	" 4B	0550-00803-4600
74LS368	1	" 4P	0550-00803-4700
74LS374	2	" 1J,1K	0550-00803-6700
74LS377	2	" 1D,4L	0550-00803-4800
PROM BS-3	1	IC 2D	0550-00803-5500
" BS-4	1	" 2R	0550-00803-5600
" BS-5	1	" 4M	0550-00803-5700
" BS-6	1	" 6B	0550-00803-5800
" BS-7	1	" 7H	0550-00803-5900
PHAN. PAL BS-8	1	" 5A	0550-00803-6600
EPROM BS-J	1	" 5N	0550-00803-4900
" BS-K	1	" 5M	0550-00803-5000
" BS-L	1	" 5L	0550-00803-5100
" BS-N	1	" 5E	0550-00803-5200
" BS-P	1	" 5D	0550-00803-5300
PHAN RAM 2K X8	2	" 1E,1H	0550-00803-5400

DESCRIPTION	QUAN.	DESIGNATION	PART NO.
PHAN.RAM A OPTIONS	1	———	0550-00803-6000
* RAM KIT A OPTIONS 1	1	IC 4J	0550-00803-6200
* " " " " 2	4	" 4D,4E,4F,4H	0550-00803-6300
PHAN. RAM B OPTIONS	1	———	0550-00803-6100
** RAM KIT B OPTIONS 1	1	IC 2B	0550-00803-6400
** " " " " 2	2	" 3A,3B	0550-00803-6500
16 PIN SOCKET	5	ICS-2D,2R,4M,6B,7H	0508-00804-0700
18 PIN "	2	" 4K,4N	0508-00804-0600
20PIN "	1	" 5A	0550-00804-2300
24PIN "	8	" 1E,1H,5B,5D,5E,5L	0508-00804-0500
		" 5M,5N	
28 PIN "	3	" 1M,1N,1R	0508-00804-0400
42 PIN "	1	" 5R	0508-00804-1900
6 PIN MNL CONN.	1	J2	0017-00021-0424
50 PIN RT. ANGLE CONN.	1	J1	0508-00804-0800
DUAL LOCKING SPACERS	4	PCMH1—PCMH4	0017-00042-0253
CABLE ASSY.	1	———	0508-00804-2200
50-PIN PLUG-SOCKET CONNECTOR	2	P1,P2	0508-00804-0900
RIBBON CABLE-.33FT	1	CABLE	0017-00033-0346
50-CONDUCTOR 28 GA. STRND AND CONDUCTOR			
BOSCONIAN P.C.B	1	———	A080-91413-B550

PROJECT ENG: J. SEZERSZEN		USED ON BOSCONIAN	MIDWAY MFG. CO. FRANKLIN PK ILL
DO NOT SCALE DWG	HEAT TREAT	SCALE FULL	NO REQ'D 1 PER
DIM TOLERANCES UNLESS SPECIFIED	MATL	BOSCONIAN VIDEO A084-91413-B550 ASS'Y DRWNG.	PART NO M051-00550-B012
DWN M.M. CHK'D Y.S. DATE 12/9/82	FINISH		

REVISIONS

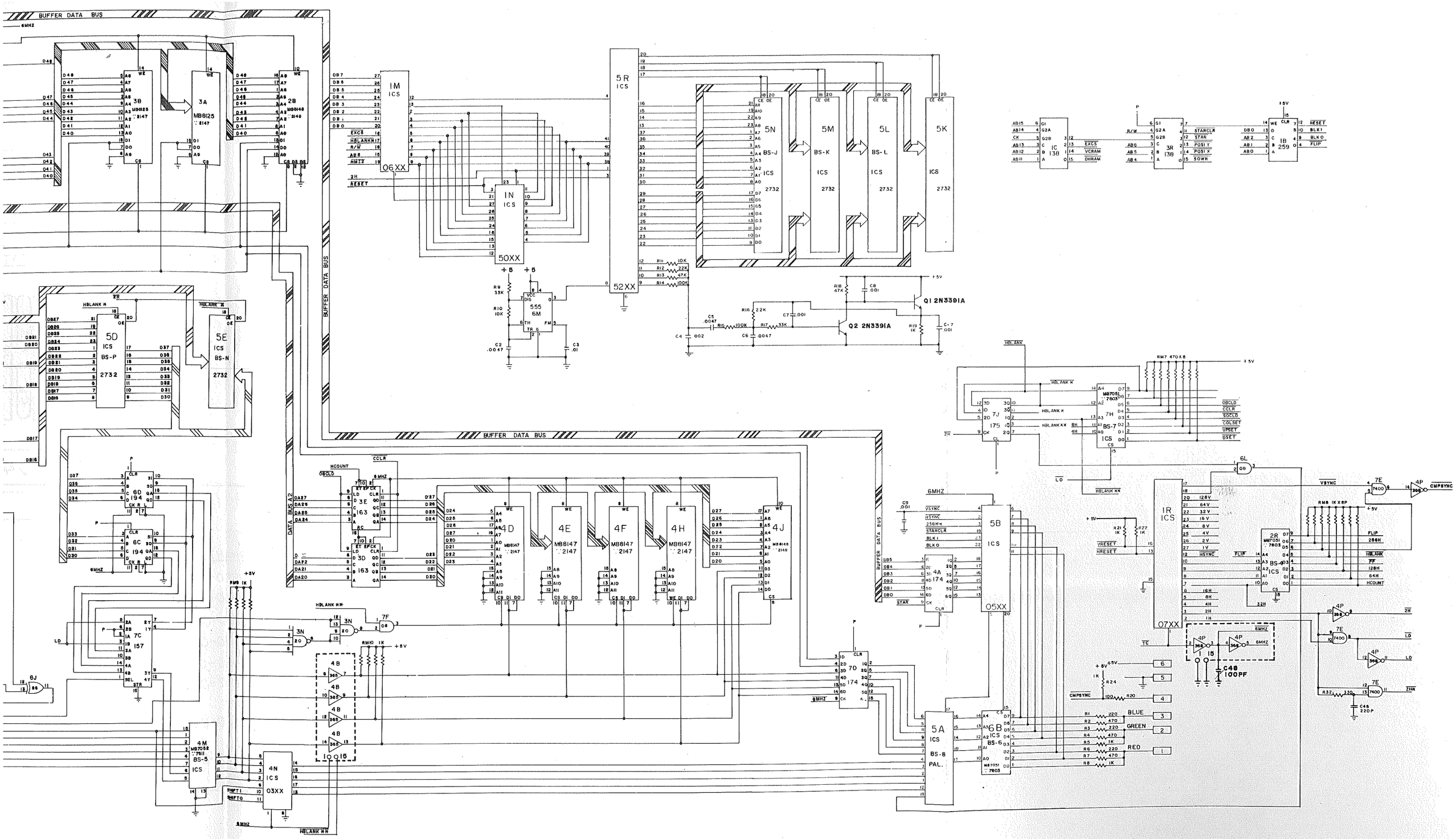
BUFFER DATA BUS
6MHZ
3B
MB8125
2147
3A
MB8125
2147
2B
MB8148
2148
1M
ICS
06XX
1N
ICS
50XX
5R
ICS
52XX
5N
BS-J
ICS
2732
5M
BS-K
ICS
2732
5L
BS-L
ICS
2732
5K
ICS
2732
555
6M
Q1 2N3391A
Q2 2N3391A
IC
13B
3R
13B
1B
259
5D
ICS
BS-P
2732
5E
ICS
BS-N
2732
6D
194
6C
194
3E
163
3D
163
4D
MB8147
2147
4E
MB8147
2147
4F
MB8147
2147
4H
MB8147
2147
4J
MB8148
2148
7C
157
4M
MB7052
7611
BS-5
ICS
4N
ICS
03XX
4B
7D
174
7J
175
7H
MB7051
7603
BS-7
ICS
4A
174
5B
ICS
05XX
5A
ICS
BS-8
PAL.
6B
ICS
BS-6
MB7051
7603
1R
ICS
07XX
2R
MB7051
7603
BS-9
ICS
RM7 470X8
RM8 1K X8P
RM9 1K
RM10 1K
C48
100PF
C45
220P
BLUE
GREEN
RED
CMPSYNC
VSYNC
HSYNC
HBLANK
HCOUNT
RESET
BLK1
BLK0
FLIP
STARCLR
STAR
POSIT
POSIX
SOWR
EXCS
VCRAM
DHRAM
OBCLD
CCLR
SOCLD
COLSET
VPSET
DSET
256H
128H
64H
16H
8H
4H
2H
1H
LD
ZHR
TC
LO
+5V

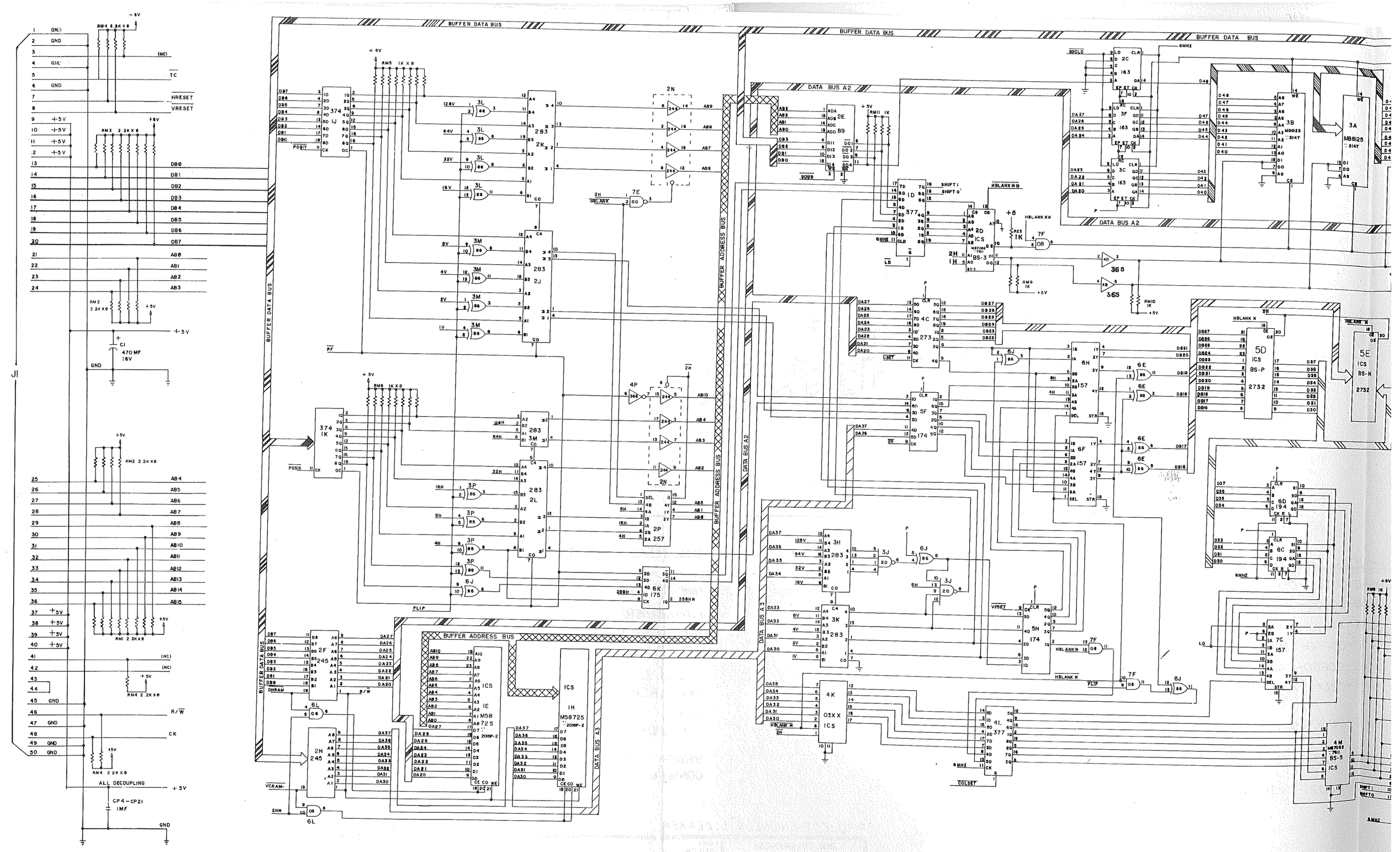
BUFFER DATA BUS
BUFFER ADDRESS BUS
DATA BUS A2
DATA BUS A3
J1
GND
(NC)
TC
HRESET
VRESET
+5V
-5V
DB0
DB1
DB2
DB3
DB4
DB5
DB6
DB7
AB0
AB1
AB2
AB3
AB4
AB5
AB6
AB7
AB8
AB9
AB10
AB11
AB12
AB13
AB14
AB15
R/W
CK
ALL DECOUPLING
CP4 - CP21
1MF
C1
470 MF
:6V
RM2 2.2K X8
RM3 2.2K X8
RM4 2.2K X8
RM5 1K X8
RM6 1K X8
RM11 1K
RM9 1K
RM10 1K
R23 1K
POSIY
POSIX
PF
FLIP
DHRAM
VCRAM
HBLANK
HBLANK H
VSET
COLSET
LD
SHIFT I
SHIFT O
6MHZ
8MHZ
2F 245
2H 245
374 IJ
374 1K
283 2K
283 2J
283 3M
283 2L
283 3H
283 3K
174 5F
377 4C
377 4L
157 6H
157 6F
157 7C
163 2C
163 3F
163 3C
194 6C
194 6D
174 5H
2P 257
6K 175
2E ADA 89
2D ICS BS-3
5D ICS BS-P 2732
5E ICS BS-N 2732
3B MB8125 2147
3A MB8125 2147
4M MB7051 BS-5 ICS
1H ICS M58725 20HP-2
1E ICS M58725 20HP-2
4K 03XX ICS
365
08
06
86
20
244
PROJECT ENG: J. SZERSZEN
DO NOT SCALE DWG
DIM TOLERANCES UNLESS SPECIFIED
2/9/82
USED ON BOSCONIAN
NO REQD 1 PER
MIDWAY MFG. CO.
FRANKLIN PA. U.S.A.
REVISIONS
SHEET FULL
BOSCONIAN VIDEO
A084-91413-8550
SCHEMATIC
PART NO. M051-00550 8013

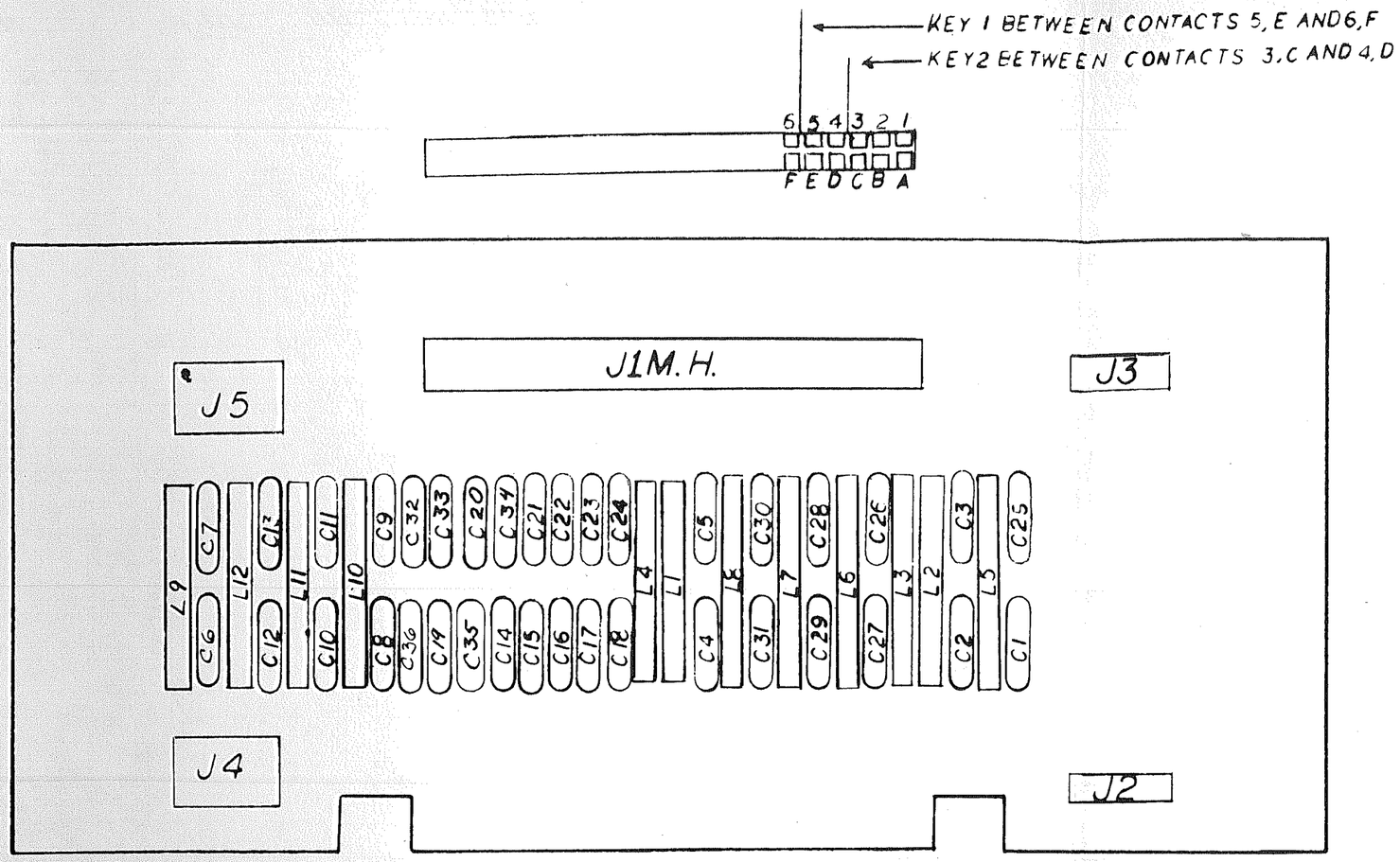

NUMBER
00-0500
00-0100
00-0200
00-0300
00-0400
XX-XXAX
04-0100
04-0200
21-0418

DESCRIPTION	QUANTITY	DESIGNATION	PHANTOM NUMBER
3 PIN HEADER AMP 350429-1	2	J2-J3	0017-00021-0443
6 PIN HEADER AMP 350431-1	2	J4-J5	0017-0021-0424
PC EDGECON KEY	2	J1MH	0017-00021-0396
6-32x10 SLOT PAN SCREW	2	J1MH	0017-00101-0574
WSH 6 145-.250-.032	2	J1MH	0017-00104-0002
BRKT-CONN.FIN	1	J1MH	0866-0016-00XF

PROJECT ENGINEER L. CEKKER

THIS DWG. IS CONFIDENTIAL & PROPERTY OF MIDWAY MFG. CO.

S DATED

DIM. TOLERANCES
UNLESS OTHERWISE SPEC.
CONCENTRICITY T.I.R. . . .002
FRACTIONAL . . . . . ± .1/64
DECIMAL . . . . . ± .005
HOLE DIA. . . . . + .002 — .000
ANGLE . . . . . ± 1/2°
DO NOT SCALE DWG

FIRST USED ON		
DRN CKS	DATE 1-4-82	SCALE FULL
MECH CHK	MAT'L	
ELEC CHK	FINISH	

MIDWAY MFG. CO.
FRANKLIN PK., IL. 60131 A BALLY CO.

BOSCONIAN FILTER P.C.
ASSY. DRWNG.
A084-91414-A550

REVISIONS

PART NO.
M·0·5·1 -0·0·5·5· 0-A·0·1·4

DESIGNATION	DESCRIPTION
C1	.1 MF AX CER
C2-C5	47 PF AX CER
C6, C7	470 PF AX CER
C8-C13	100 PF AX CER
C14-C36	.01 MF AX CER
L1-L4	CHOKE 10 UH W.W. MILLER
L5-L8	CHOKE 10 UH W.W.
L9-L12	CHOKE ENCAP 10 UH
J1	P.C. EDGE CONN
J2, J3	3 PIN HEADER
J4, J5	6 PIN HEADER
J1 M.H.	2 EDGE CONN. KEY (2) 6-32 x 10 SLOT PAN SCREW (2) WSH 6 145-.250-.032 (1) BRKT.-CONN. FIN.

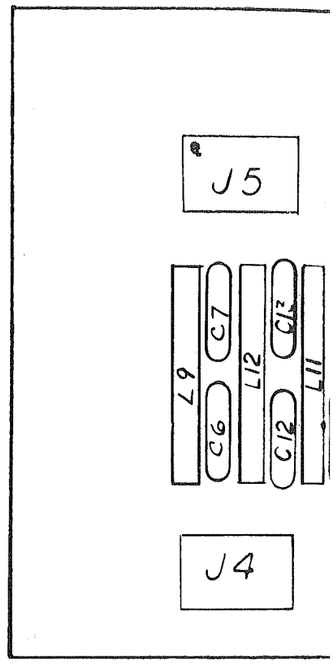

DESCRIPTION	QUANTITY	DESIGNATION	PHANTOM NUMBER
47 PF 50V AX CER	4	C2-C5	0550-00800-0500
100 PF 50V AX CER	6	C8-C13.	0550-00800-0100
470 PF 50V AX CER	2	C6, C7	0550-00800-0200
.01 MF 50V AX CER	23	C14-C36	0550-00800-0300
.1 MF 50V AX CER	1	C1	0550-00800-0400
10 UH W.W. RF CHOKE MILLER	4	L1-L4	0067-021XX-XXAX
10 UH W.W. RF CHOKE	4	L5-L8	0550-00804-0100
10 UH ENCAP RF CHOKE	4	L9-L12	0550-00804-0200
PC EDGE CONN	1	J1	C017-00021-0418

PLEASE DESTROY ALL PRINTS DATED PRIOR TO 1-4-82

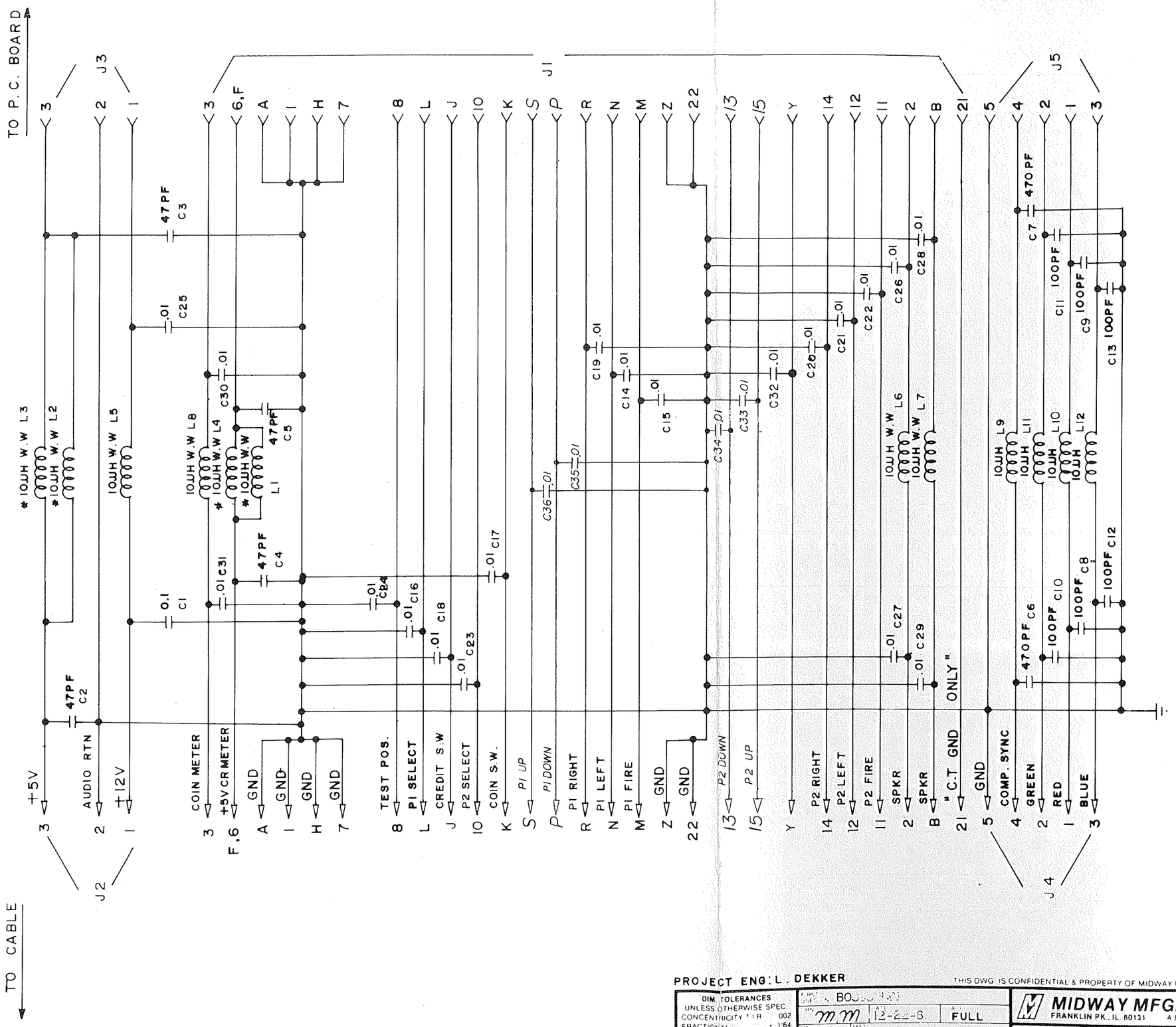

NOTE:

ALL .1 + .01 ARE MF
ALL CAPS AX. CER. UNLESS NOTED OTHERWISE

* 1.5 AMP (MILLER TYPE) INDUCTORS

PROJECT ENG: L. DEKKER

THIS DWG IS CONFIDENTIAL & PROPERTY OF MIDWAY MFG CO

DIM. TOLERANCES UNLESS OTHERWISE SPEC	DR. BOSCONIAN		MIDWAY MFG. CO. FRANKLIN PK., IL 60131 A BALLY CO
CONCENTRICITY T.I.R. .002	mm	12-22-8	FULL
FRACTIONAL ± 1/64			BOSCONIAN FILTER BOARD
DECIMAL ± .005			A084-91344-55
HOLE DIA +.002 -.000			
ANGLE ± 1/2°			
DO NOT SCALE DWG			

REVISIONS

PART NO M051-00550-A015